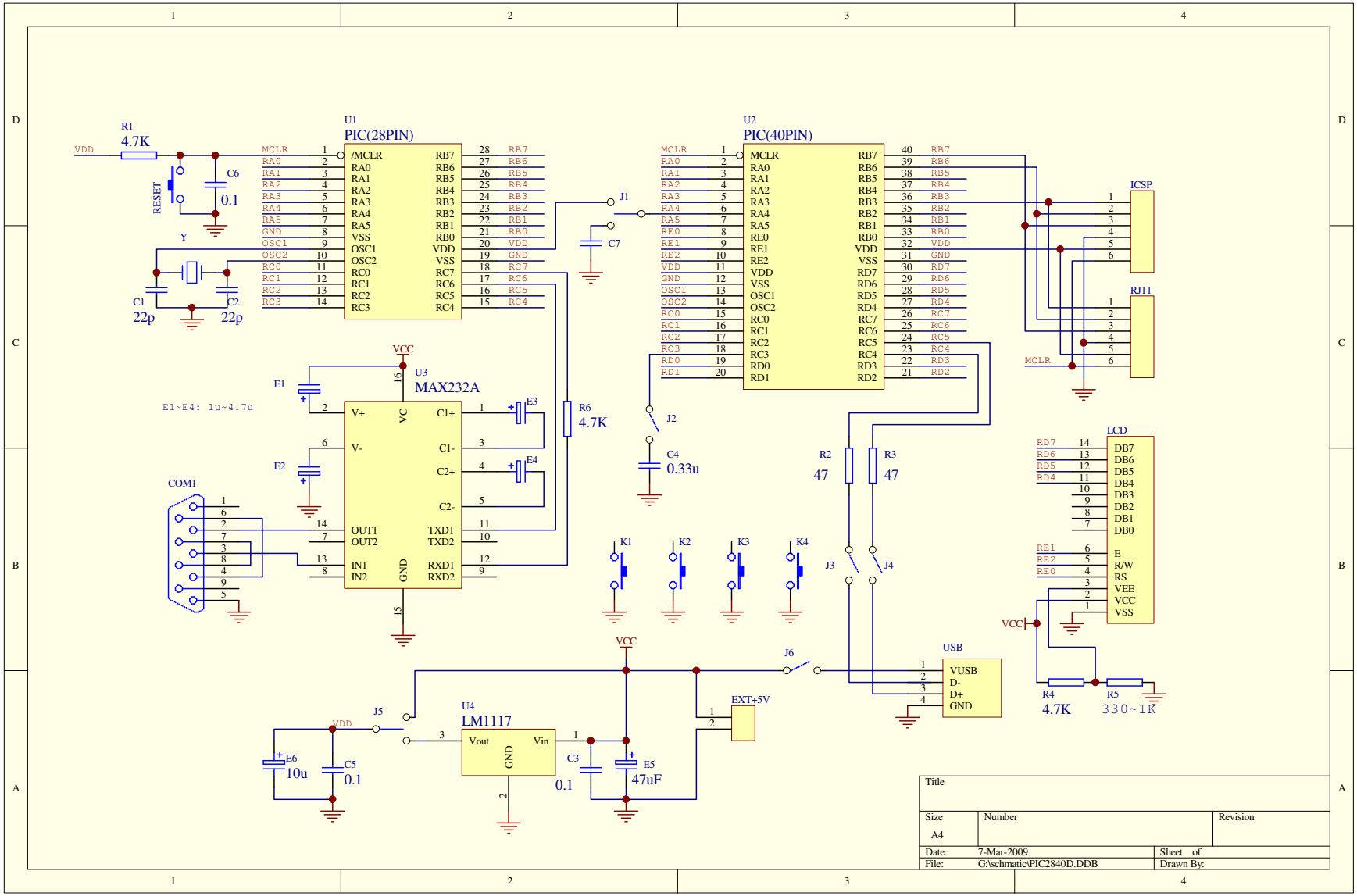
U1
PIC(28PIN)
U2
PIC(40PIN)
R1
4.7K
VDD
RESET
C6
0.1
Y
C1
22p
C2
22p
MCLR
RA0
RA1
RA2
RA3
RA4
RA5
GND
OSC1
OSC2
RC0
RC1
RC2
RC3
RB7
RB6
RB5
RB4
RB3
RB2
RB1
RB0
VDD
VSS
RC7
RC6
RC5
RC4
RE0
RE1
RE2
RD7
RD6
RD5
RD4
RD3
RD2
RD0
RD1
J1
C7
J2
C4
0.33u
ICSP
RJ11
VCC
U3
MAX232A
E1
E2
E3
E4
E1~E4: 1u~4.7u
R6
4.7K
COM1
V+
V-
C1+
C1-
C2+
C2-
OUT1
OUT2
IN1
IN2
TXD1
TXD2
RXD1
RXD2
VC
GND
R2
47
R3
47
J3
J4
K1
K2
K3
K4
LCD
DB7
DB6
DB5
DB4
DB3
DB2
DB1
DB0
E
R/W
RS
VEE
VCC
VSS
USB
VUSB
D-
D+
GND
J6
EXT+5V
R4
4.7K
R5
330~1K
U4
LM1117
Vout
Vin
GND
J5
E6
10u
C5
0.1
C3
0.1
E5
47uF
Title
Size
A4
Number
Revision
Date:
7-Mar-2009
Sheet of
File:
G:\schmatic\PIC2840D.DDB
Drawn By: